DÜSTERLOH Fluidtechnik

Hydraulic Motors

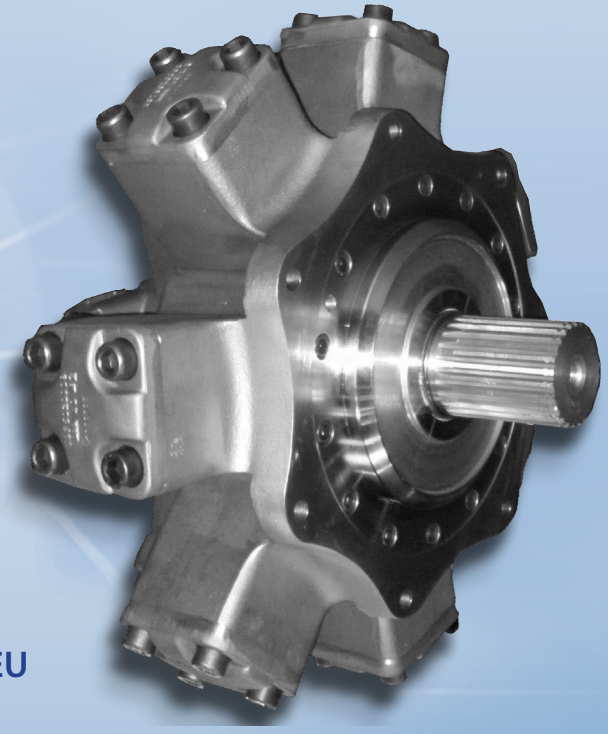

Explosion protected Hydraulic Motors

with fixed and with adjustable displacement acc. to Directive 2014/34/EU

Insatallation and Operating Instructions

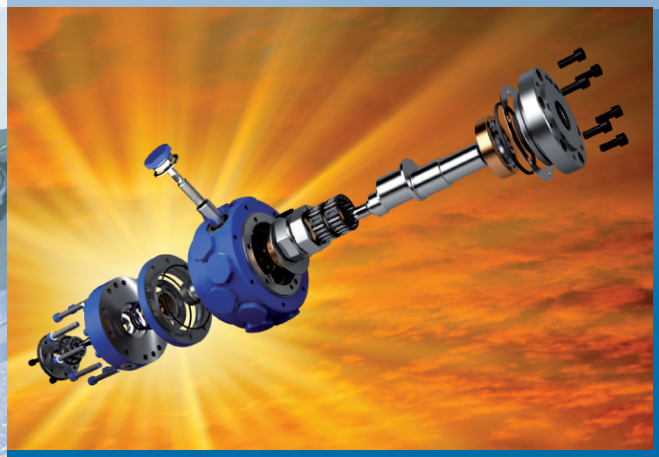

ATEX

RM1-001 EN / Ex Edition 2022.06/05

1. Information 4
1.1 General information 4
1.2 Safety and information signs 4
1.3 Intendend use 4
1.4 Safety instructions 4
1.5 Disposal 5

2. General specification 5

3. Maintenance, storing, transport, checking, preparations 6
3.1 Maintenance of the motor 6
3.2 Storing of the motor 6
3.3 Transport of the motor 6
3.4 Checking of the motor 7
3.5 Preparations for to connect the motor 7
3.6 Additional painting of the motor 7
3.7 Preparations for the start-up of the motor 7

4. Recommended circuit diagrams 8
4.1 Open circuit with two directions of rotation 8
4.2 Closed circuit with two directions of rotation 8
4.3 Parallel and short-circuited circuits 8
4.4 Inlet control 8
4.5 Outlet control 8
4.6 Closed circuit with 2 directions of rotations (variable speed motors) 9

5. Assembly / Start-up 9
5.1 Installation of the hydraulic motor 9
5.2 Assembly of the couplings 9
5.3 Connections 10
5.4 Pipelines 10
5.5 Leakage lines 10
5.6. Direction of rotation and direction of flow 10
5.7 Radial and axial forces acting on the shaft end 10
5.8 High pressure protection 11
5.9 Filters 11

5.10 Start-up 11
5.11 Temperature measurement 11
5.12 Fluids and fluid change 12
a) Mineral oil based fluids 12
b) Fire resistant fluids HBF, HFC 12
c) Fire resistant fluids HFD 12
d) Fluid change 12

6. Operating and tolerances 13
6.1 Start-up behavior and lowest speeds 13
6.2 Application as a pump 13
6.3 Leakage 14
6.4 Noise 14
6.5 Dynamic behavior 14
6.6 Stopping under load 14
6.7 Heat balance 14

7. Hydraulic motor with infinitely variable displacement 14
7.1 Stroking control 14
7.2 Stroking pressure 15
7.3 Stroking time 15
7.4 Stroking with motor at standstill 16
7.5 Pump operation 16

8. Literature 16

9. Declaration of Conformity 17
9.1 Catagories 2G and 2D 17
9.2 Catagories 3G and 3D 18

Appendix: Customer service - calculation sheet 19

1. Information

1.1 General Information

Please read this operating instruction carefully before you work with and start-up the motor. You must follow these instructions. This operation instruction and all other extra documentations must lie close to the motor. In the case of gear motors and brake motors you must also follow the operation instructions of these parts. If you have any questions about this operation instruction, feel free to contact DÜSTERLOH Fluidtechnik!

1.2 Safety and information signs

Please pay attention to following safety and information signs!

Danger!
Danger of life and rist of injury

Attention!
Demages at the machine possible

Danger!
Inportant information for explosive-safety

Information!
Useful information

1.3 Intended use

Hydraulic motors are used to change hydraulic energy in mechanic energy and for industrial plants. The motors fulfill the explosion requirements with the Directive 2014/34/EU (ATEX114) for the category of the type plate. The technical data of the type plate and documentation must be in compliance with regulations. If there is an accident caused by a possible malfunction of a motor, a gear-motor, a brake-motor, or a brake-gear-motor, you must to provide safety measures.

1.4 Safety instructions

By all workings with for example transport, storing, installation, start-up and maintenance must not be explosive atmosphere. Furthermore, only qualified personnel are allowed to handle these tasks. It is recommended that if repairs need to be made they be made at DÜSTERLOH Fluidtechnik. Assembly and maintenance works must be at stopped motor. The actuator must be de energized and be secured in order to ensure that it does not accidentally switch-on. Transportation and hoisting devices must have enough capacity.
Please consider all safety signs also these ones which are in the following chapters of this operating instruction. Furthermore it must be comply with all national and other regulations about the safety and

STOP

accident prevention. Pay attention that with incorrect installation, incorrect using, wrong handling, disregarding of safety signs, illegal removing and structural changes from the motor can happen serious person injuries and property damages.

1.5 Disposal

Notice the local regulations about appropriate means of disposal. In particular the proper way to collect and dispose of lubricants.

Motor parts:	Material:
Crankshaft, wobble shaft, bearing, gudgeon pin, screws, spring, polygon ring, piston / AE, KM, RM..N), control rings, eccentric	Steel
Motor case, bearing cover, cylinder cover, control cover, piston (RM..X), engine cover	Cast iron
Conecting rod	Bronze
Radial shat seal rings	Elastomer with steel
O-rings, parbak-rings, sealing plug	Elastomer

2. General specification

DUESTERLOH hydraulic motors are radial piston motors with internally supported pistons and axial piston motors in wobble plate design. These produce torque through the pressure ring or connecting rod which operates directly on the eccentric of the drive shaft, respectively on the wobble plate. By the axial piston motors are the pistons axial in the engine cover and operate directly at the wobble washer and produce the torque.

The oil distribution, the piston and pressure ring assembly or the piston and connecting rod assembly are hydrostatically balanced, a feature which gives good starting characteristics with full torque over the whole speed range with minimal variations. Excellent overall efficiency is guaranteed with low noise levels.

The low inertia permits rapid alteration in speed and direction of rotation. DUESTERLOH hydraulic motors have proved their suitability in control circuits with predetermined shaft speed, speed alteration, torque limiting and alteration and other values. Most of the motors can be supplied with a second shaft.

The Motors can be operated in open or closed circuits and also as pumps with a suitable feed. DUESTERLOH hydraulic motors have been designed for and operated successfully for years with fire-resistant fluids (see 5.12).

The design of the eccentric and its bearings was based on high radial and axial load factors for the drive shaft.

DUESTERLOH can also supply hydraulic motors with infinitely variable displacement.

3. Maintenance, storing, transport, checking, preparations

3.1 Maintenance of the motor

DUESTERLOH hydraulic motors are maintenance free and are lubricated by their operating fluids. Refer to specific instructions regarding pressure medium and filter change.

3.2 Storing of the motor

All ports on new motors are closed with plastic plugs. Internal parts are covered with hydraulic oil after the test run, the external part of the shaft and the connecting port flange are protected by corrosion-resistant oil. In this condition the motor can be stored in a dry place for about 6 months.

Consider the following points for storing:

- Storing in installation position and in not-fall position
- Bare metal hast to be with oil for protection
- Storing in dry room
- Temperature without high fluctuations between -5°C and +50°C
- Relative humidity less than 60 %
- No directly insulation
- No aggressive or corrosive substances in vicinity
  (contaminated air, ozone, gas, solvent, acid, lyes, salts, radioactivity, etc.)
- No shock and vibrations
- If stored for longer periods, the motors must be filled completely with emulsifying hydraulic oil type H-LPD and all openings have to be plugged or flanged oil-tight. After a maximum storing time of 12 months, the hydraulic oil must be changed completely and the shaft rotated approximately 10 times by hand.

3.3 Transport of the motor

The motor shafts have either a threaded centre hole (form DS with DIN 332) suitable for fitting a ring bolt (DIN 580), or three metrical threads at the front side of the shaft. All motors can be transported by crane hook or other means in this way.

3.4 Checking of the motor

The actuator hast to be checked and is just allowed to montage if there is:

- no damage for example; from the storing or transport. In particular has to be checked the radial shaft seal ring, sealing plug and cover
- no oil leakage
- no corrosion or other seeing from improperly storing
- no packaging materials at the motor

3.5 Preparations for to connect the motor

It has to keep in mind that at the motor built actuator parts must be ATEX-conform like gears, brakes, couplings, pulleys etc..

By mounting of the motor must surely not be any explosive atmosphere.

Drive and output elements must have contact protection, like pulleys, couplings and chains.

If the wrong turn direction makes damages or dangers, then has to figure out with a test run the correct turn direction of the output shaft.
Make sure that there are not and will not be any aggressive and corrosive substances.
In case of doubt, contact DÜSTERLOH Fluidtechnik for to take any action that is appropriate.

The flange where the motor gets screwed has to have low vibrations, torsion-resistant and plane (planarity < 0,2mm). Dirty screw-on surfaces of the motor or flange has to get cleaned.

3.6 Additional painting of the motor

In the case of additional painting of the motor, the motor must be still clean of color and solvent the radial shaft seal ring, rubber elements, motor coupling elements and type label. The complete thickness of the painting has to be maximal 0,2 mm with the categories II2G/II3G.

3.7 Preparations for the start-up of the motor

Before the start-up of the motor, it must be filled with operative fluid at the leakage port. It is also possible to let the motor work in unloaded condition (in low operating pressure) as long as the motor case is full.

The hydraulic system must be vented often. While working the motor, with smallest speed is the proportion air in the motor very important for the uniformity rate.
The best ventilation is to let the motor run at high speed for a few minutes with the stub shaft down.

4. Recommended circuit diagrams (principal circuits)

4.1 Open circuit with two directions of rotation

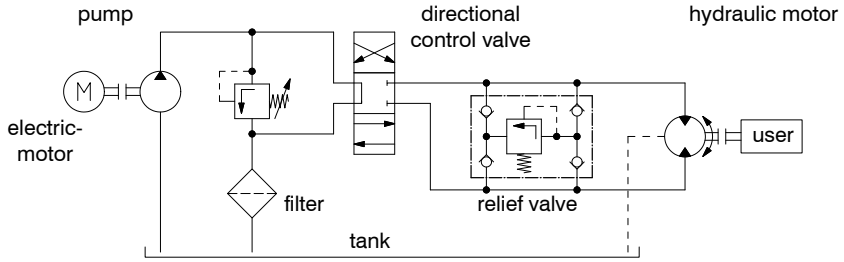

4.2 Closed circuit with two directions of rotation

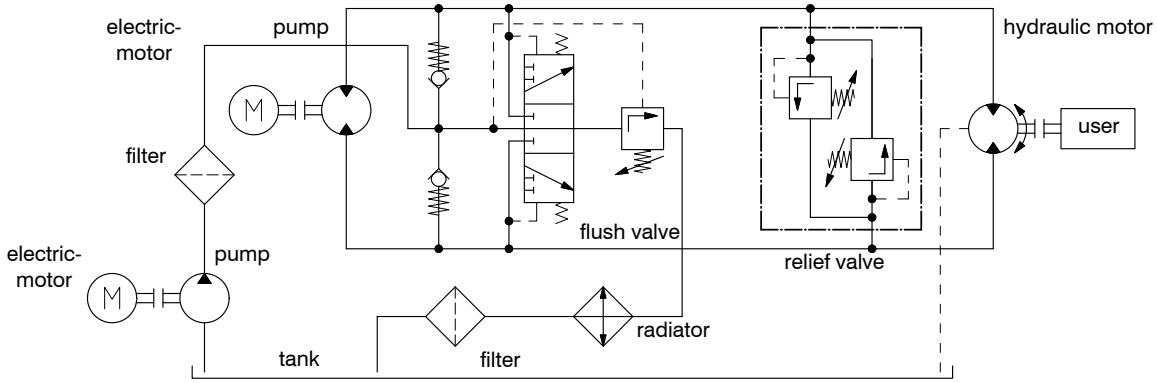

4.3 Parallel and short circuited circuits (parallel circuit shown)

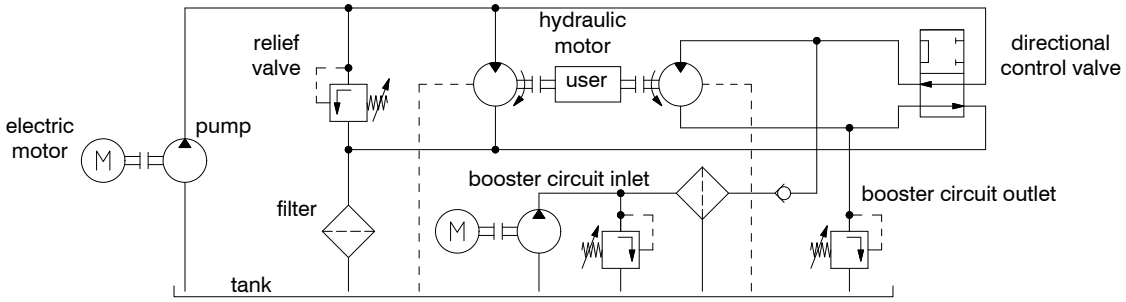

4.4 Inlet control

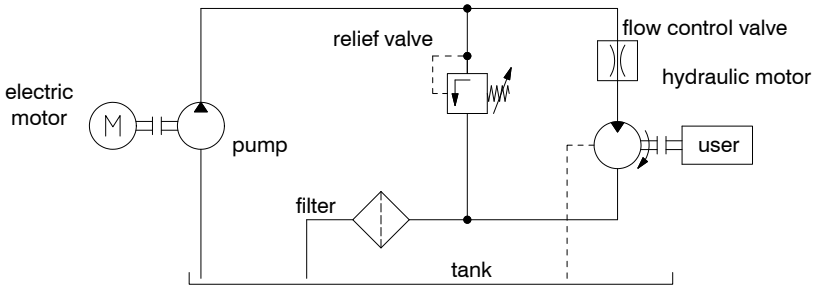

4.5 Outlet control

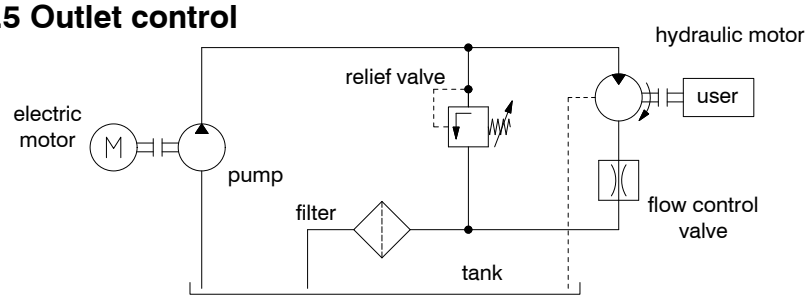

This document is not subject to the revision service!

4.6 Closed circuit with 2 directions of rotation Hydraulic motor with infinitely variable displacement

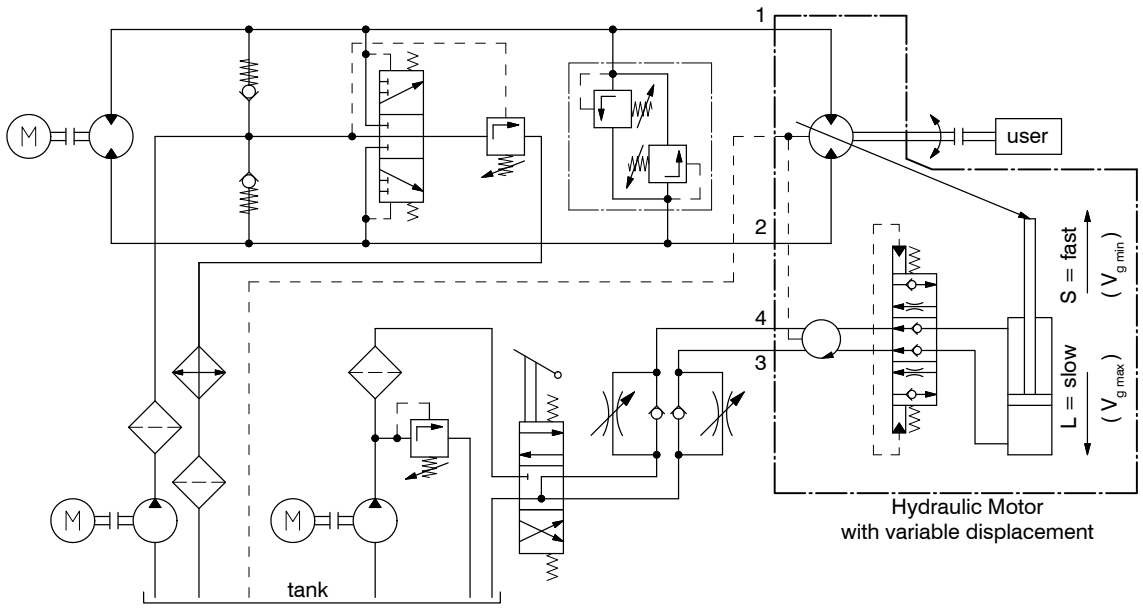

5. Assembly/ Start-up

5.1 Installation of hydraulic motors

All DUESTERLOH hydraulic motors are designed as flange motors. In order to avoid uncontrollable additional loads on the drive shaft, the motor should be mounted well aligned and on a plane, torsion-free contact surface. Fixing bolts class 10.9 (min. tensile strength 1000 N/mm²) should be used with the relevant tensioning torque. If the motor is used mainly with a high reversing frequency or in the start-stop mode, two of the fasteners should be fitted bolts.

If a coupling is not used, the drive shafts of radial piston motors can be connected directly with the driven shaft. In this case, a torque support is required and it is necessary to re-calculate the radial forces.

The motors can be mounted in any position as long as the leak-oil connection remains in the correct position (see 4.5).

5.2 Assembly of couplings

Couplings, pinions, pulleys and sprockets should never be hammered onto the drive shaft since rolling bearings are likely to be damaged. Always use a draw bolt as shown in drawing right. For removal of couplings always use a suitable pulling tool.

Assembly of couplings, pinions, etc., by sheet „PG1-900 EN“.

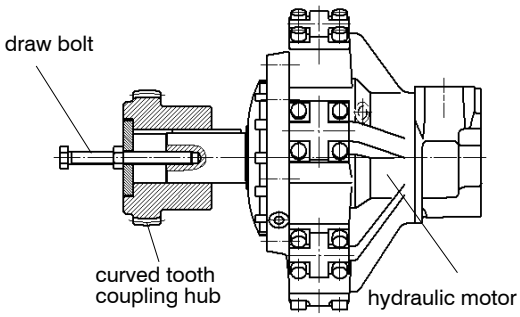

5.3 Connections

Threaded connections are used on smaller hydraulic motors and SAE-flange connections on larger sizes. Commercial fittings are required for piping up threaded connections, for flange connections SAE-flanges have to be used in conjunction with welded piping and compression fittings. Refer to HM1-015E (Page 20 for RM 250X - RM 500X, Page 21 for RM 710X - RM 900X) and HM1-013E (Page 21 for RM 1000X - RM 5000X) for flanges.

5.4 Pipelines

If there is any movement between motors and pipelines, then use flexible connections. Be careful to observe maker‘s recommendations. Rigid pipes should be carefully set and not forced when fitting to motors. Where possible cut and bend pipes cold and remove frazing. Hot bent and welded pipes should be cleaned mechanically to remove scale, weld spatter and slag and then pickled, neutralized, water washed and air dried; coat with mineral oil and plug ends until ready to use.
Long lengths of pipe should be securely fastened at 1 meter intervals and air vents provided at the highest points in the pipe work system. Where compression fittings are used, make sure that they are fitted to maker‘s instructions and that they are accessible for maintenance purposes.
Pipe sizes, both rigid and flexible should be based on fluid used, maximum operating pressures, acceptable fluid velocities and/or flow resistance.

5.5 Leakage lines

Leakage lines have to be pressure-less (maximum 1 - 2 bar measured at the hydraulic motor), be separated from the return line and laid in such a way that the motor housing is always full.

a) Motor fitted with horizontal shaft position:
Use the leakage port above the shaft centre line.

b) Motor fitted with vertical shaft position (downward):
Use the leakage port which is in the highest position.

c) Motor fitted with vertical shaft position (upward):
Use the leakage port which is in the highest position.
Refer to instructions regarding different motor types as per catalogs HM1-014 (KM 11 - RM 250N), HM1-015 250X - RM 900X, HM1-013 (RM 1000X - RM 5000X)).

5.6 Direction of rotation and direction of flow

Rotation and flow are shown by arrows in the motor specifications. A change of motor rotation is achieved by exchanging return and inlet lines.

5.7 Radial and axial forces acting on the shaft end

Due to the large radial rolling bearings, the drive shafts of DUESTERLOH radial piston motors can accommodate considerable radial and axial loads. This constitutes savings in respect of intermediate bearings for pinions, pulleys, sprockets etc.. The nominal bearing life of taper roller bearings, based on the function of radial force and the position of the point where this force is applied, can be taken from the nomograms shown on the data sheets of individual motors. The manufacturer must be consulted regarding the bearing life resulting from axial and/or the combination of radial and axial forces. Radial piston motors with hollow shafts and motors with variable volumetric displacement allow less radial forces as motors of other designs.

5.8 High pressure protection

To protect hydraulic motors against unacceptable pressure peaks, relief valves should be installed. Generally these valves should be capable of relieving maximum flow without pressure increase.

5.9 Filters

Cleanliness and good filtration are an absolute must for hydraulic systems to minimize wear and eliminate operating faults. As finer the filter is as longer is the life of the motor.
Filters should be cleaned and exchanged regularly.

The following filter gauges are recommended:

Main flow filter	10 - 25 µm
Filter in inlet line	10 - 25 µm
Leakage filter about	ca. 25 µm
Bypass filter	1 - 10 µm
Pump suction filter	50 - 200 µm
(generally to be avoided because of risk of cavitation observe recommendations of pump manufacturers)	
Oil filter strainer	100 - 500 µm

5.10 Start-up

DÜSTERLOH hydraulic motors are long life motors. This implies a running-in of the motors.

Start-up/ running-in of the hydraulic motors:
0 - 15 min: maximum pressure 100 bar, maximum speed 1/3 n_{max}
above 15 min: gradually increase pressure and speed to operating values.

An optimal motor running will be after a running-in of about 30 hours.

5.11 Temperature measurement

ATEX temperature class (maximal surface temperature) implies correct installation conditions. Just a few changes of installation conditions can affect the motor temperature.
Therefore must be measured the surface temperature at the motor while start-up with maximal permitted continuous output.
(Excepted of this are; motors which have at the explosive-safety type label in the next to last line the temperature class T1 - T3 or with maximal surface temperature 200°C.)
For the temperature measuring are normal measurements possible with measuring range of 0°C to 130°C, measuring accuracy ± 4°C, able to measure surface temperature and air temperature.

Operations of the temperature measuring:

1. Motor running for 4 hours with maximal permitted permanent pressure and a half of maximal speed
2. After the warm up phase of the motor has to be measured the motor cover temperature at different positions
3. The highest measured value must not higher as the maximal permitted tem perature from the explosion safety type sign by minus 25°C (for example at the temperature class T4 must not has the maximal measured surface temperature more than 135-25=110°C).

For safekeeping running of the hydraulic motor should be get documented and repeated the temperature measuring in regular intervals (for example once per month) with leakage oil measuring, preferably with operational parameters.
If the measurement results have noticeable differences then could be a damage problem of the motor. Therefore should be get inspect the motor for safekeeping.

5.12 Fluids and fluid change

a) Mineral-oil based of fluids

The standard fluid for hydraulic motors is hydraulic fluid. The properties of the oil must meet the conditions of DIN 51525, group H-LP and HM, HV as per CETOP G6.12.41 Sec. The maximum oil temperature at the pressure port of the motor should not exceed 90°C. According to temperature conditions the viscosity should be selected in the optimum range of 20 - 50 mm^2/s and/or in an admissible range of 10 - 150 mm^2/s. The maximum viscosity during start-up may not exceed 1000 mm^2/s.

b) Fire resistant fluids HFB, HFC

Fluids of this group must meet the requirements of CETOP regulations G6.12.41 Sec./ISO/DIS 6071. HFB is a water oil emulsion with approximately the same proportions of oil and water. HFC is a polyglycol water mixture. As this fluid has low lubricating properties, special motors have been developed for these fluids. Compared to hydraulic oil a pressure reduction to 70 % of the values stated for hydraulic oil is required. Viscosity tolerances should correspond to the data stated for mineral oil based fluids. The maximum fluid temperature should in no case exceed 60°C.

c) Fire resistant fluids HFD

The properties of fluids in this group must meet CETOP regulations G6.12.41 Sec./ISO/DIS 6071. There are no limitations with regard to technical data compared with mineral-oil based fluids. However, special seals (Viton) must be provided.

d) Fluid change

Observe recommendations applying to hydraulic equipment. Renew first filling of a new hydraulic system after 100 - 500 operating hours - depending on contamination found during inspection of filters. Further changes have to be made after 1000 to 2000 operating hours respectively. Do not blend different types of fluid (see manufacturer‘s recommendations).

6. Operation and tolerances

6.1 Start-up behavior and lowest continuous speeds

The start-up behavior of hydraulic motors is of great importance for drives operating under load. It is often forgotten that not only do hydraulic motors have a decreased start-up torque compared to the operating torque, but that downstream mechanical gears, bearings, wheel drives, etc. require a higher torque for start-up to overcome inertia. In addition, acceleration torques must be applied.

The compressibility of the enclosed oil column and the elongation of components under pressure including flexible and rigid pipelines may have a great influence on uniform operation at low speeds. In particular the influence of length and size as well as the elasticity of pipelines under pressure should not be underestimated. In most cases, they contain a multiple of the oil volume enclosed in the motor. Therefore are the following steps recommended:

a) Install flow controls or control valves as close as possible in front of or - if required - behind the motor.

b) Pipelines under pressure between the motor and the control should be as rigid as possible and be limited to a minimum diameter.

c) An outlet control valve is preferred if the motor is used as a generator from time to time (i.e. pump). For output control valves a less favourable start-up behaviour and a larger loss must be tolerated.

d) In the case of inlet control valves circulation will be improved by approx. 5 bar due to blessing the return line.

e) A pressure reduction due to the use of a larger motor will bring about a considerable circulation improvement.

Standard data for lowest continuous speed:

$$n_{min\ dauer} = \frac{2\,Q_d}{V_g}$$

Q_d = leakage
V_g = geometric displacement volume

Q_d is dependent on the inlet pressure p_1 as well as outlet pressure p_2.
Thus is the achievable minimum speed also dependent on other related pressures.

6.2 Operation of pump

If sufficient inlet capacity is available, the hydraulic motor can be used as a pump. This may be necessary if the hydraulic motor is passed by downstream mass forces during deceleration. In this case, the output side of the motor is to be fed with operating fluid under pressure. The required minimum pressure depends on the maximum speed which can be achieved with the motor if used as a pump. The minimum pressure selected must be significantly higher than half the idling pressure $\Delta p = f(n)$.

The basic rule for it is:

$$p_{min} = \frac{\Delta p}{2} + p_d + 3\ \text{bar}$$

p_d leakage pressure

In the case of large variations in load, a higher value should be selected for p_{min}.
$\Delta p = f(n)$ is stated in the idling diagram of the motor specifications.

6.3 Leakage

There is exterior and interior leakage. The exterior leakage includes all fluid loss from the inlet and outlet side into the leakage chamber of the hydraulic motor. These are, for instance, fluid quantities forming between piston and cylinder, from the hydrostatic pressure field and also from the control unit. Internal leakages are short circuit losses at the control unit, which are directly discharged into the return line without performing any work. The control of DUESTERLOH hydraulic motors is a patented, practically leakage-free and self-adjusting, face-to-face eccentric design. The total leakage losses can be taken from the motor specifications.

6.4 Noise

DUESTERLOH hydraulic motors develop a very low noise level. Standard values are approximately 60 - 65 dBA, measured at a distance of 1 m.

6.5 Dynamic behavior

DUESTERLOH hydraulic motors are designed with low rotating masses, which are a prerequisite for good control and regulating duties with fast changes in speed and direction of rotation. Most of the motors can be equipped with a second shaft to accommodate the following Instruments:

Eddy-current tachometer, fitted directly on the hydraulic motor or through remote indicator and Impulse transmitter. DC tachometer dynamo to generate speed stress characteristics for performing certain control functions. In closed circuits with solenoid valves, speeds and minimal speeds independent from the load of up to 0.1 rpm are possible.

6.6 Stopping under load

When applying torque by external load if the motor is stopped, sufficient inlet capacity must be provided because of leakage oil, or a mechanical braking or locking unit must be activated. Moreover, the appropriate safety regulations should be observed.

6.7 Heat balance

If a re-calculation as per data sheet „Customer Service“ (re-calculation recommended as from apprx. 20 % of nominal motor rating according to Catalogs HM1-014E; HM1-015E, HM1-013E and HM1-017E) shows that it is necessary to flush in order to dissipate excessive heat, the flushing medium (approximately 5 - 10 dm3/min as calculated) has to be fed into the lowest leakage port. The flushing medium can be fed from the high or low pressure side, or by a separate pump. The medium is discharged together with the leakage fluid from the leakage port (see 4.5). It has to be observed that the leakage pressure never exceeds the return pressure. It may be advisable to install a relief valve in the return line.

7. Hydraulic motors with infinitely variable displacement

7.1 Stroking control

In each ease, it is necessary to contact the motor manufacturer in order to check the hydraulic circuit in respect of the relation between the stroking times required and the corresponding stroking pressures p_v necessary.

Control principle:

a) Variable speed motor
b) External control valve
c) Pressure released double check valves
d) Dual channel slip ring

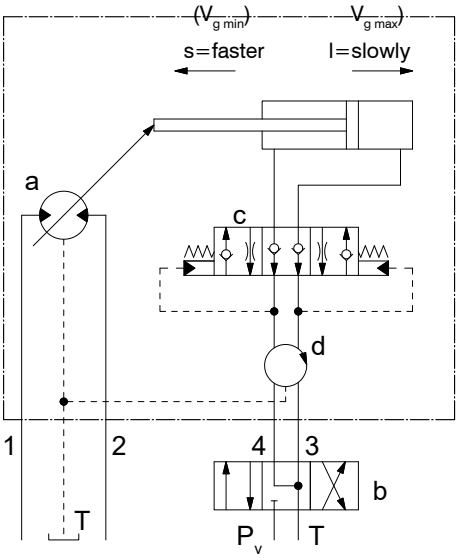

In variable speed motors the volumetric displacement can be set infinitely to allow for any desired intermediate value. Stroking ist normally carried out while the motor is in motion.

Stroking direction:

Pressure on Control port 3:
Stroking in direction $V_{g\,min}$

Pressure on control port 4:
Stroking in direction $V_{g\,max}$

In the no-stroking position, control ports 3 and 4 are relieved to tank without pressure and the slip ring becomes unpressurized also. The stroking system is then hydraulically locked by pressure released double check valves.

7.2 Stroking pressure p_v

When stroking during operation: $p_{v\,max}$=315 bar

for $V_{g\,min}$ --> $V_{g\,max}$: $p_v \geq 20$ bar at all pressures
$V_{g\,max}$ --> $V_{g\,min}$: $p_v \geq 40$ bar and $p_v \geq \Delta p$

Stroking pressure can be induced by a separate pump or by an accumulator. It can also be taken from the main pressure line to the motor (please note marginal conditions and stroking times - refer to manufacturer for advice).

7.3 Stroking time

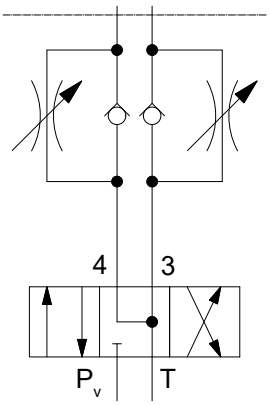

The stroking time depends on the stroking pressure:
The higher the pressure, the shorter the stroking time.
The minimum permissible stroking time must not be less than 2 sec..
The differential pressure Δp at the main ports 1 and 2 on the motor also influence the stroking times: Stroking time for $V_{g\,min}$ --> $V_{g\,max}$ is reduced with increasing Δp, but increased when stroking in the opposite direction. In order to equalize stroking times, it has been found useful to incorporate adjustable one-way restrictor valves of small nominal size in the connecting lines 3 and 4.
Stroking times depend upon pressure values p_v, Δp and speed
- please refer to manufacturer for advice.

7.4 Stroking the motor at standstill

Stroking under thrust is principle possible while the motor is standing still. According to the relative position between crankshaft and cylinder borings, the value of pressure difference at the motor and the value of stroking pressure influence different forces on the adjusting device. At some constellations of the above called parameters, it is possible in exceptional cases that no adjusting follows, because the counteracted forces are greater than the adjusting forces. If you want to regulate the motor in this case during standstill, you must either rotate the crankshaft by some degrees, or decrease the pressure difference of the motor, or increase the stroking pressure, or choose a combination of these possibilities.

7.5 Pump operation

With a sufficient feed variable speed motors can also be utilized as slow running adjustable pumps. The required feed pressure depends on the speed and the viscosity of the pressure medium. Please refer to the manufacturer DÜSTERLOH Fluidtechnik for advice.

8. Literature

Dr.-Ing. Jürgen KLIE:	Infinitely variable hydraulic motors. Published in: „Der Konstrukteur 6/82“
Dr.-Ing. Jürgen KLIE:	Characteristics and features of variable speed hydraulic hydraulic motors. Published in: „MM - Maschinenmarkt 4/80“
Dr.-Ing. Jürgen KLIE / Dipl.-Ing. Walter Lubos:	Start-up behaviour and operation of hydraulic motors with internal piston support at lowest speeds. Paper delivered during the International Conference „Systemschau Antreiben und Bewegen“, Hannover Exhibition 1977.
Dipl.-Ing. Dieter Schneeweiss:	Hydraulic feed drive, accuracy to 1/100 mm without pilot valves. Published in: „Fluid 3/77“

9. Declaration of Conformity

(for the Directive 2014/34/EU (ATEX114))

9.1 Declaration of Confomity for the group of devices II, categories 2G and 2D

DÜSTERLOH Fluidtechnik GmbH

Im Vogelsang 105
45527 Hattingen
Germany
Phone: +49 (0) 2324 / 709 - 0
Fax: +49 (0) 2324 / 709 - 110
www.duesterloh.de
info@duesterloh.de

DÜSTERLOH Fluidtechnik confirmed that the hydraulic motors with the classes AE, KM, RM...N, RM...X of the categories 2G and 2D are corresponding with the

Directive 2014/34/EU (ATEX114)

Applied standards: EN 1127-1, ISO 80079-36, ISO 80079-37

DÜSTERLOH Fluidtechnik lodges the documents of the Directive 2014/34/EU (ATEX114):

Bureau Veritas Product Services Germany GmbH
Businesspark A96
86842 Türkheim
Germany

Lodged number: 19THH0532

DÜSTERLOH Fluidtechnik GmbH

Hattingen, January 16, 2020
Place and date of issue

Dipl.-Kfm. Reinhard Kunz
Managing director

Dipl.-Ing. Thomas Hagedorn
Managing director

9. Declaration of Conformity

(for the Directive 2014/34/EU (ATEX114))

9.1 Declaration of Confomity for the group of devices II, categories 3G and 3D

DÜSTERLOH Fluidtechnik GmbH

Im Vogelsang 105
45527 Hattingen
Germany
Phone: +49 (0) 2324 / 709 - 0
Fax: +49 (0) 2324 / 709 - 110
www.duesterloh.de
info@duesterloh.de

DÜSTERLOH Fluidtechnik confirmed that the hydraulic motors with the classes AE, KM, RM...N, RM...X of the categories 3G and 3D are corresponding with the

Directive 2014/34/EU (ATEX114)

Applied standards: EN 1127-1, ISO 80079-36, ISO 80079-37

DÜSTERLOH Fluidtechnik lodges the documents of the Directive 2014/34/EU (ATEX114) at:

Bureau Veritas Product Services Germany GmbH
Businesspark A96
86842 Türkheim
Germany

Lodged number: 19THH0532

DÜSTERLOH Fluidtechnik GmbH

Hattingen, January 16, 2020
Place and date of issue

Dipl.-Kfm. Reinhard Kunz
Managing director

Dipl.-Ing. Thomas Hagedorn
Managing director

You know your product, we know our hydraulic motors! Give us your conditions, we will calculate all important data for the suitable drive.

1. Company _____ Person in charge _____

Address _____ Department _____

P. C. / City _____ Phone _____

Country _____ Fax _____

2. Operating data: secondary drive

2.1 Machine type: _____ project: _____

2.2 Machine operating factor at gearboxes k = _____

2.3 Installation position: ☐ horizontal ☐ vertical

☐ drive shaft upwards ☐ drive shaft downwards

2.4 Shaft load: ☐ pressure ☐ tension

radial: _____ N axial: _____ N

2.5 Nominal torque T_N = _____ Nm speed n _____ rpm time _____ min

2.6 Continuous torque T_{cont} = _____ Nm speed n _____ rpm time _____ min

2.7 Maximum torque T_{max} = _____ Nm speed n _____ rpm time _____ min

2.8 Minimum torque T_{min} = _____ Nm speed n _____ rpm time _____ min

2.9 Maximum speed n_{max} = _____ rpm time t _____ min

2.10 Minimum speed n_{min} = _____ rpm time t _____ min

2.11 Information about working cycle: _____

_____

2.12 ☐ Secondary drive with valve assembly on the motor

2.13 ☐ Control drive with proportional- / servo valve

2.14 Continuous power: P_{cont} = _____ kW Intermittent power: P_{int} = _____ kW

2.15 ☐ one-shift-operation ☐ two-shift-operation ☐ three-shift-operation

2.16 Desired bearing life: L_{h10} = _____ hours

2.17 Remarks: _____

_____

_____

3. Operating data: primary drive

Hydraulic fluid: _____ operating temperature: Θ= _____ °C

Delivery volume of pump Q_P = _____ l/min

☐ opened circuit ☐ closed circuit

Feeding pressure p_F = _____ bar

System pressure p_{Sys} = _____ bar

Desired operating pressure at T_N p_N ~ _____ bar

This document is not subject to the revision service!

DUESTERLOH has been developing fluid technology products for more than 100 years.
The drives, controls and hydraulic power units from Hattingen are appreciated throughout the world for their complete reliability; including under extreme conditions. The owner-managed company´s own development and construction department and the wide range of products cater for distinctive flexibility and customer-orientation.

Products

- Hydraulic radial piston motors
- Hydraulic axial piston motors
- Hydraulic high precision motors
- Pneumatic motors
- Pneumatic starters
- Hydraulic and pneumatic controls
- Hydraulic power units

Designing controls and hydraulic power units specific to the customer is our company´s major strength. Vast product diversity is also available for standardized products.

Industrial areas of application

- Machine tools
- Smelting and rolling mill equipment
- Foundry machines
- Testing machines
- Shipbuilding (diesel engines)
- Offshore technology
- Printing and paper technology
- Vehicle construction
- Manipulators
- Environmental technology
- Mining equipment
- Materials handling equipment

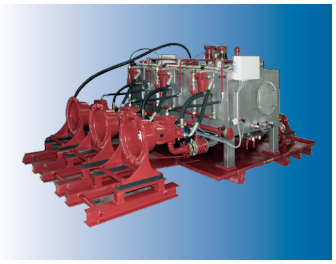

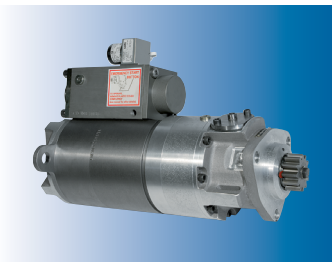

Düsterloh Fluidtechnik GmbH
Im Vogelsang 105
D-45527 Hattingen

Tel.: +49 2324 709-0
Fax: +49 2324 709-110

DÜSTERLOH Fluidtechnik

e-mail: info@duesterloh.de
Internet: www.duesterloh.de

Certified acc. to ISO 9001